TP03DA Series

DESCRIPTION: **3W Wide Range Input Voltage DC/DC Converters**

The rated output power of TP03DA converters is 3W,the outline dimensions is "31.75*20.32*11.2", 2:1 and 4:1 wide input voltage range,the voltage range is 4.9V-9V,9V-18V,18V-36V,36V-72V,9V-36V and 18V-72VDC.The accuracy of the converter can reach ±1% ,It can be widely used in telecommunications, railway transportation, instrument and etc.

FEATURES

3W output power	2:1 and 4:1 wide input voltage range	Over load protection
31.75mm*20.32mm*11.2mm standard package	Fixed switching frequency	Operating temperature: -25℃to 55℃
Metal shell packaging	RoHS compliant	/

SELECTION GUIDE

Part Number	Input Vlotage voltage（VDC）		Output		Efficiency(Typ) %	Maxium capacitive load（u F）
	Rated	Range values	Voltage（VDC）	Current（A）		
TP03DA05S05	5(2:1)	4.5-9	5	0.6	≥73	1000
TP03DA05D05	5(2:1)	4.5-9	±5	±0.3	≥73	±850
TP03DA12S03	12(2:1)	9-18	3.3	0.6	≥73	2200
TP03DA12S05	12(2:1)	9-18	5	0.6	≥74	1500
TP03DA12S12	12(2:1)	9-18	12	0.25	≥75	660
TP03DA12S15	12(2:1)	9-18	15	0.2	≥75	470
TP03DA12D05	12(2:1)	9-18	±5	±0.3	≥76	±850
TP03DA12D12	12(2:1)	9-18	±12	±0.125	≥78	±140
TP03DA12D15	12(2:1)	9-18	±15	±0.1	≥79	±47
TP03DA24S03	24(2:1)	18-36	3.3	0.6	≥74	2200
TP03DA24S05	24(2:1)	18-36	5	0.6	≥76	1500
TP03DA24S12	24(2:1)	18-36	12	0.25	≥76	660
TP03DA24S15	24(2:1)	18-36	15	0.2	≥76	470
TP03DA24D05	24(2:1)	18-36	±5	±0.3	≥78	±850
TP03DA24D12	24(2:1)	18-36	±12	±0.125	≥79	±140
TP03DA24D15	24(2:1)	18-36	±15	±0.1	≥79	±47
TP03DA48S03	48(2:1)	36-72	3.3	0.6	≥74	2200
TP03DA48S05	48(2:1)	36-72	5	0.6	≥76	1500
TP03DA48S12	48(2:1)	36-72	12	0.25	≥78	660
TP03DA48S15	48(2:1)	36-72	15	0.2	≥78	470
TP03DA48D05	48(2:1)	36-72	±5	±0.3	≥79	±850
TP03DA48D12	48(2:1)	36-72	±12	±0.125	≥79	±140
TP03DA48D15	48(2:1)	36-72	±15	±0.1	≥80	±47
TP03DA24S05W	24(4:1)	9-36	5	0.6	≥75	1500
TP03DA24S12W	24(4:1)	9-36	12	0.25	≥75	660
TP03DA24S15W	24(4:1)	9-36	15	0.2	≥75	470
TP03DA24D05W	24(4:1)	9-36	±5	±0.3	≥77	±850
TP03DA24D12W	24(4:1)	9-36	±12	±0.125	≥78	±140
TP03DA24D15W	24(4:1)	9-36	±15	±0.1	≥78	±47
TP03DA48S05W	48(4:1)	18-72	5	0.6	≥75	1500
TP03DA48S12W	48(4:1)	18-72	12	0.25	≥77	660
TP03DA48S15W	48(4:1)	18-72	15	0.2	≥77	470
TP03DA48D05W	48(4:1)	18-72	±5	±0.3	≥78	±850
TP03DA48D12W	48(4:1)	18-72	±12	±0.125	≥78	±140
TP03DA48D15W	48(4:1)	18-72	±15	±0.1	≥79	±47

All specifications typical at TA=25°C, nominal input voltage and rated output current unless otherwise specified.

GENERAL CHARACTERISTICS

parameter	Test conditions	Min	Typ	Max	Units
Isolation voltage	Input to Output		500	1500	VDC
Isolation resistance	Input to Output	100M			ohm
Seismic	10~55Hz		5		G
MTBF	MIL-HDBK-217F2		5×10^5		hrs
Over-current protection mode	Full input range		Auto recovery		
Cooling	Free air convection				
Case material	Metal case				

INPUT CHARACTERISTICS

parameter	Test conditions	Min	Typ	Max	Units
Startup voltage	5V Input module(4.5V -9V)	4.5	5	9	VDC
Startup voltage	12V Input module(9V -18V)	8.8	9	9.3	VDC
Startup voltage	24V Input module(18V-36V)			18	VDC
Startup voltage	48V Input module(36V-72V)			36	VDC
Startup voltage	24V Input module(9V -36V)	8.8	9	9.3	VDC
Startup voltage	48V Input module(18V-72V)			18	VDC
Start rising time	Input rising time from 5%-100%	20			ms

OUTPUT CHARACTERISTICS

parameter	Test conditions	Min	Typ	Max	Units
Voltage accuracy	Io=0.1•••1.0 x Ionom Vi=Vi rated			±1	%
Line regulation	Vimin≤Vi≤Vimax			±0.2	%
Load regulation	Io=0.1…1.0 x Ionom Vimin≤ Vi≤Vimax			±0.5	%
Auxiliary voltage accuracy	Main Load and auxiliary load differ 25%,the auxiliary circuit of the load with at least 25%, the main circuit with full load			±3	%
Ripple and noise	20MHz bandwidth			±1	%
Over-current protection	Vimin≤Vi≤Vimax	120			%
Transient recovery time	25% load change			±5	%
Transient overshoot range	25% load change			400	us
Switch frequency	Vimin≤Vi≤Vimax		30		KHz

ENVIRONMENT CHARACTERISTICS

parameter	Test conditions	Min	Typ	Max	Units
Environment temperature	industrial-class	-25		+55	℃
Maximum case temperature	industrial-class			+85	℃
Storage temperature	Industry-class/ Military JI&JII class	-40		+105	℃
Relative humidity	No condensation	5		90	RH(%)
Temperature coefficient			±0.02		%/℃

- Case temperature under shall not exceed the maximum case temperature level.

MECHANICAL DIMENSIONS

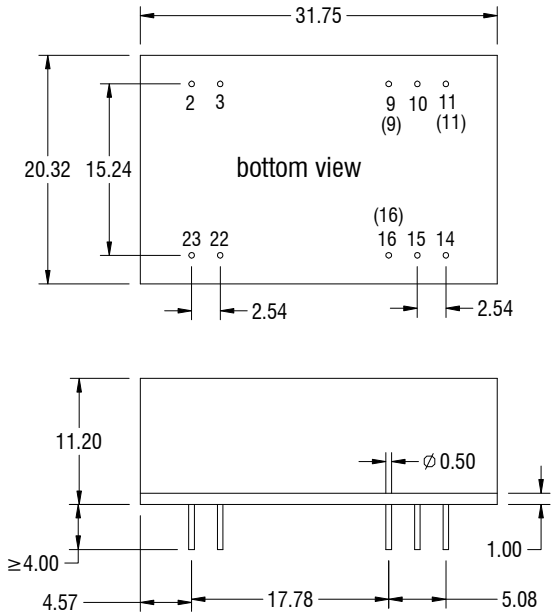

Units: mm

Tolerance: ±0.2mm

PIN CONNECTION		
Pin	Single Output	Dual Output
2	-Vin	-Vin
3	-Vin	-Vin
9	NC	/
(9)	/	Com
10	NC	NC
11	NC	/
(11)	/	-Vout
14	+Vout	+Vout
15	NC	NC
16	-Vout	/
(16)	/	Com
22	+Vin	+Vin
23	+Vin	+Vin

MODEL SELECTION

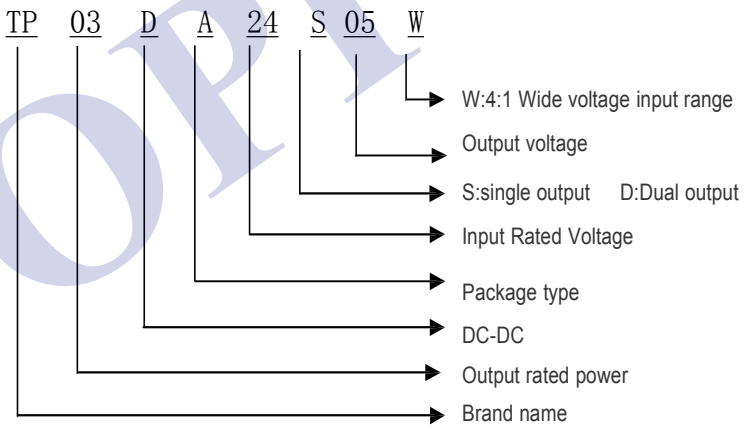

RECOMMEND CIRCUIT:

Single Output:

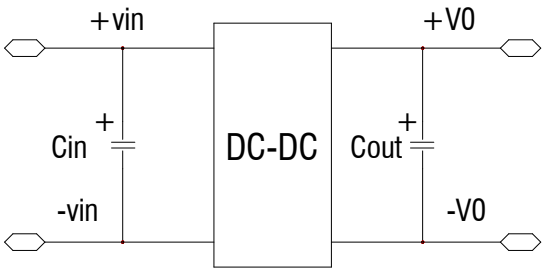

RECOMMEND CIRCUIT:

Dual Output:

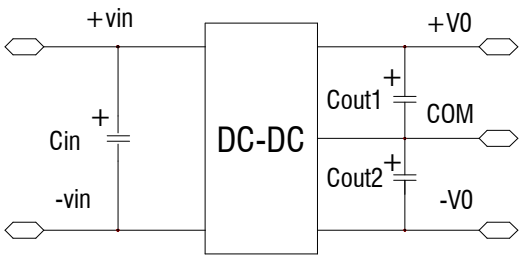

- Add input capacitance Cin is helpful to improve the electromagnetic compatibility, recommend Cin use 47 uF-100uF of the electrolytic capacitors.
- If the module connect to the digital circuits, please add the Cout、Cout1、Cout2.
- If Cout, Cout1, Cout2 value is too high or lower ESR, it will cause the module instable,
- The recommended value of Cout, Cout1, Cout2 should be 100 uF/A, the current here means the output current.

USING ATTENTIONS

- Module will cause irreversible damage when in the state of the input reverse polarity.
- Module will cause irreversible damage when in the long-term overload conditions.
- Module will cause irreversible damage when out of the maximum input voltage range.