200W Single Output Switching Power Supply

HSN-200 series

■ Features :

- Low leakage current<1mA
- Protections: Short circuit / Overload / Over voltage / Over temperature
- Cooling by aluminum plate or the cabinet
- Low profile:31mm
- LED indicator for power on
- Low cost, high power reliability
- 100% full load burn-in test
- 2 years warranty

SPECIFICATION

MODEL		HSN-200-4.2A	HSN-200-4.2B	HSN-200-5A	HSN-200-5B
OUTPUT	DC VOLTAGE	4.2V	4.2V	5V	5V
	RATED CURRENT Note.2	30A	40A	30A	40A
	CURRENT RANGE	0 ~ 30A	0 ~ 40A	0 ~ 30A	0 ~ 40A
	RATED POWER(convection)	126W	168W	150W	200W
	RIPPLE & NOISE (max.) Note.3	150mVp-p	150mVp-p	150mVp-p	150mVp-p
	VOLTAGE ADJ. RANGE	3.6~4.4V	3.6~4.4V	4.5~5.5V	4.5~5.5V
	VOLTAGE TOLERANCE Note.4	±2.0%	±2.0%	±2.0%	±2.0%
	LINE REGULATION	±0.5%	±0.5%	±0.5%	±0.5%
	LOAD REGULATION	±2.0%	±2.0%	±2.0%	±2.0%
	SETUP, RISE TIME	1500ms, 100ms/230VAC 2500ms, 100ms/115VAC			
	HOLD UP TIME (Typ.)	20ms/230VAC 16ms/115VAC at full load			
INPUT	VOLTAGE RANGE	90~132VAC	180~264VAC or 254~373VDC	90~132VAC	180~264VAC or 254~373VDC
	FREQUENCY RANGE	47 ~ 63Hz			
	EFFICIENCY (Typ.)	86.5%	88%	86.5%	88%
	AC CURRENT (Typ.)	3.0A/115VAC 2.5A/230VAC			
	INRUSH CURRENT (Typ.)	COLD START <80A(twidth<1000μs measured at 50% Ipeak) at 115/230VAC			
	LEAKAGE CURRENT	<1mA			
PROTECTION	OVERLOAD	105~140% rated output power			
		Protection type : Hiccup mode, recovers automatically after fault condition is removed			
	SHORT CIRCUIT	Protection type : Hiccup mode, recovers automatically after fault condition is removed			
	OVER VOLTAGE	4.6 ~ 5.4V		5.7 ~ 7.0V	
		Protection type : Hiccup mode, recovers automatically after fault condition is removed			
	OVER TEMPERATURE	Shut down O/P voltage, recovers automatically after temperature goes down			
ENVIRONMENT	WORKING TEMP.	-25 ~ +70℃ (Refer to "Derating Curve")			
	WORKING HUMIDITY	20 ~ 90% RH non-condensing			
	STORAGE TEMP., HUMIDITY	-40 ~ +85℃, 10 ~ 95% RH			
	TEMP. COEFFICIENT	±0.03%/℃ (0 ~ 60℃)			
	VIBRATION	10 ~ 500Hz, 3G 10min./1cycle, 60min. each along X, Y, Z axes			
SAFETY & EMC (Note 5)	SAFETY STANDARDS	UL60950-1 approved			
	WITHSTAND VOLTAGE	I/P-O/P:3.0KVAC I/P-FG:2KVAC O/P-FG:0.5KVAC			
	ISOLATION RESISTANCE	I/P-O/P, I/P-FG, O/P-FG:100M Ohms/500VDC/25℃/ 70%RH			
	EMC EMISSION	Refer to EN55022 (CISPR22) Class A			
	EMC IMMUNITY	Refer to EN61000-4-5; 4KV, criteria A			
OTHERS	MTBF	283.069K hrs min. MIL-HDBK-217F (25℃)			
	DIMENSION	210*62*31mm (L*W*H)			
	PACKING	0.55kg; 20pcs/12kg/1.63CUFT			
NOTE	1. All parameters NOT specially mentioned are measured at 230VAC input, rated load and 25℃ of ambient temperature. 2. Please refer to"static characteristics". 3. Ripple & noise are measured at 20MHz of bandwidth by using a 12" twisted pair-wire terminated with a 0.1uf & 47uf parallel capacitor. 4. Tolerance : line regulation and load regulation. 5. Derating may be needed under low input voltages. Please check the static characteristics for more details. 6. The power supply is considered a component which will be installed into a final equipment. The final equipment must be re-confirmed that it still meets EMC directives.				

■ Mechanical Specification

CASE NO.:232A Unit:mm

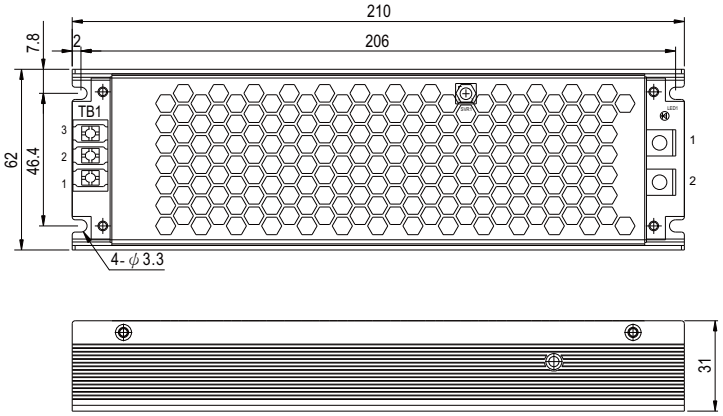

AC Input Terminal(TB1) pin NO. Assignment

Pin No.	Assignment	Terminal
1	AC/L	DG28C-B-03P-13-00AH
2	AC/N	
3	FG ⏚	

DC Output Terminal pin NO. Assignment

Pin No.	Assignment	Terminal
1	-V	CPB-7 M5
2	+V	

■ Block Diagram

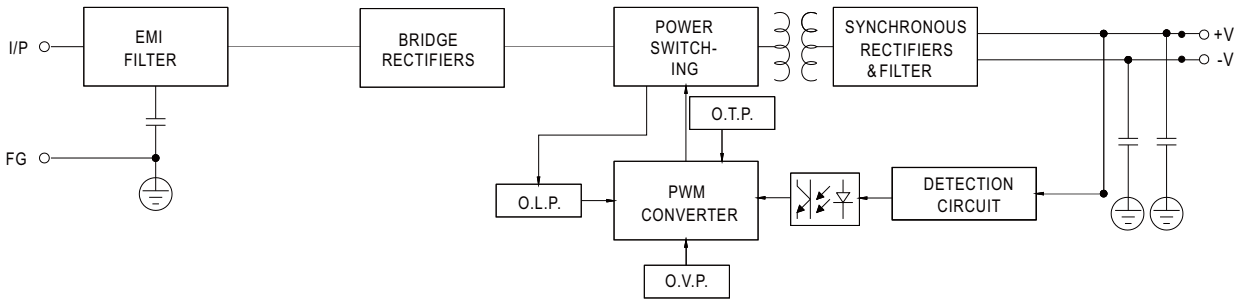

■ Derating Curve

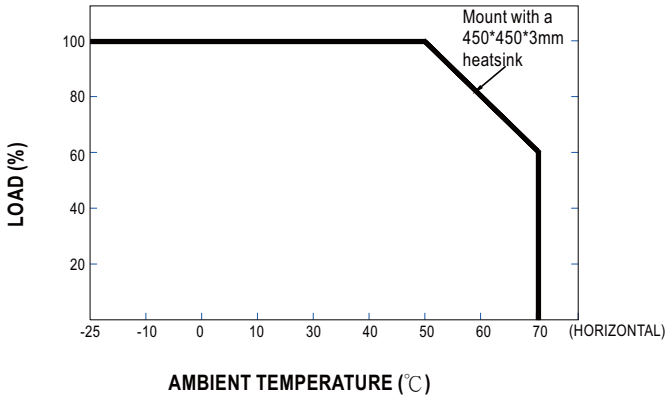

■ Static Characteristics

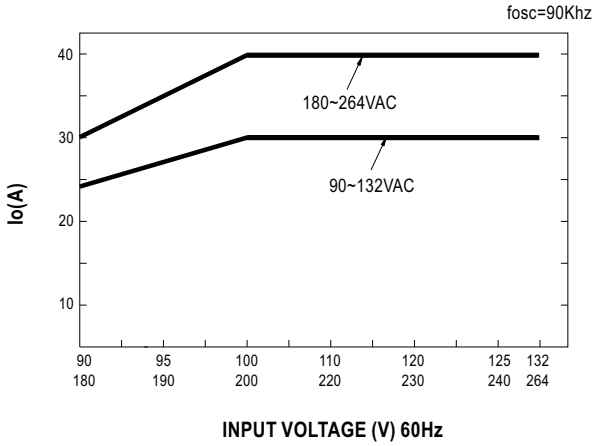

■ Installation

1.Operate with additional aluminum plate

In order to meet the"Derating Curve"and the "Static Characteristics" ,HSN-200 series must be installed onto an aluminum plate(or the cabinet of the same size) on the bottom.The size of the suggested aluminum plate is shown as below. And for optimizing thermal performance, the aluminum plate must have an even and smooth surface (or coated with thermal grease), and HSN-200 series must be firmly mounted at the center of the aluminum plate.

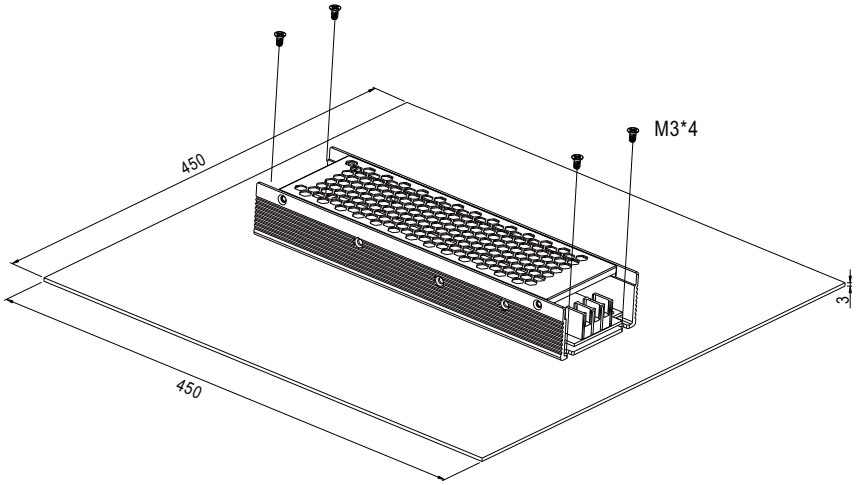
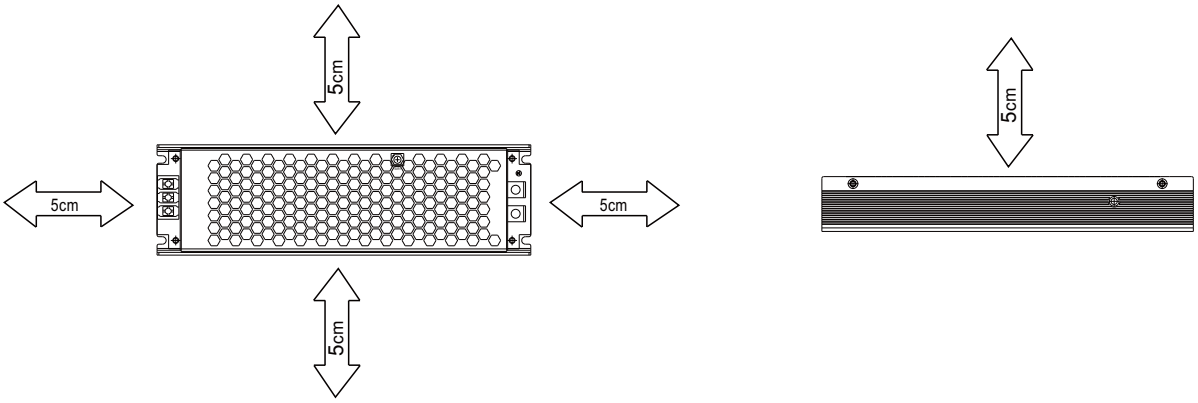
2.For heat dissipation, at least 5cm installation distance around the PSU should be kept, shown as below: