4-CH DARLINGTON SINK DRIVER AND 3-TERMINAL 0.2A 5V VOLTAGE REGULATOR

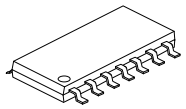

SOP-14

■ DESCRIPTION

The UTC **MX2002D** is comprised of 4-ch Darlington Sink Driver and 3-TERMINAL Voltage Regulator.

The Sink Driver is a high-voltage, high-current NPN darlington driver. Every channel includes clamp diode for switching inductive load. The applications of the UTC **MX2002D** include relay, hammer, lamp and display (LED) drivers.

The 5V Voltage Regulator is a three-terminal regulator with 0.2A output current capability.

■ FEATURES

For Darlington Sink Drivers

* Output current (single output): 500mA max
* High sustaining voltage output: 50V min
* Output clamp diodes
* Inputs compatible with various types of logic

For 5V VOLTAGE REGULATOR

* Output Current up to 200mA
* Thermal Overload Shutdown Protection
* Short Circuit Current Limiting

■ ORDERING INFORMATION

Ordering Number		Package	Packing
Lead Free	Halogen Free		
MX2002DL-S14-R	MX2002DG-S14-R	SOP-14	Tape Reel
MX2002DL-S14-T	MX2002DG-S14-T	SOP-14	Tape Reel

MX2002DL-S14-R

(1)Packing Type

(2)Package Type

(3)Lead Free

(1) R: Tape Reel, T: Tube

(2) S14: SOP-14

(3) G: Halogen Free, L: Lead Free

■ PIN CONFIGURATION

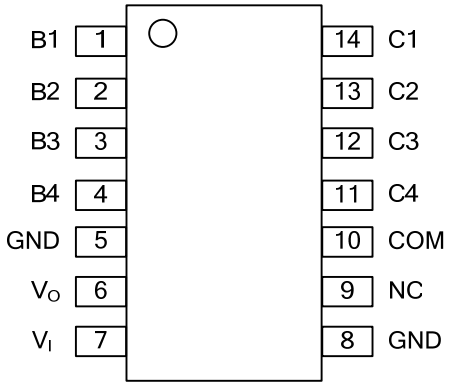

■ PIN DESCRIPTION

PIN NO.	PIN NAME	DESCRIPTION
1	B1	Input of the 1st-ch Darlington Sink Driver
2	B2	Input of the 2nd-ch Darlington Sink Driver
3	B3	Input of the 3rd-ch Darlington Sink Driver
4	B4	Input of the 4th-ch Darlington Sink Driver
5	GND	Ground of Darlington Sink Drivers
6	V_O	Output of 5V Voltage Regulator
7	V_I	Input of 5V Voltage Regulator
8	GND	Ground of 5V Voltage Regulator
9	NC	No connection
10	COM	COMMON of Darlington Sink Drivers
11	C4	Output of the 4th-ch Darlington Sink Driver
12	C3	Output of the 3rd-ch Darlington Sink Driver
13	C2	Output of the 2nd-ch Darlington Sink Driver
14	C1	Output of the 1st-ch Darlington Sink Driver

■ BLOCK DIAGRAM

UTC MX2002D

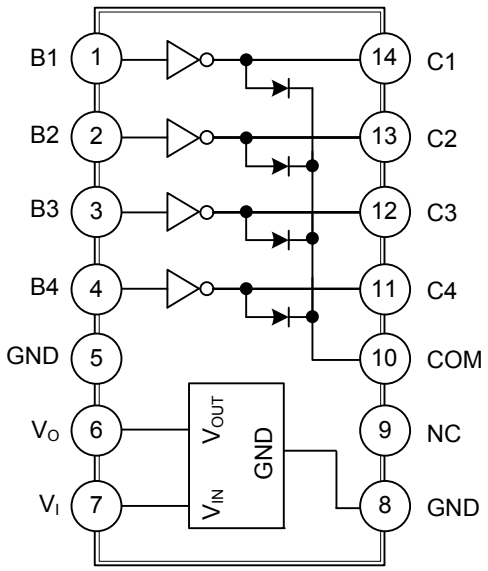

■ ABSOLUTE MAXIMUM RATING

PARAMETER	SYMBOL	RATING	UNIT
Power Dissipation (Ta=25°C)	P_D	0.9	W
Junction Temperature	T_J	+125	°C
Operating Temperature	T_{OPR}	-40~+85	°C
Storage Temperature	T_{STG}	-55~+150	°C
Darlington Sink Drivers			
Output Sustaining Voltage	V_{OUT}	-0.5~50	V
Input Voltage	V_{IN}	-0.5~30	V
Clamp Diode Reverse Voltage	V_R	50	V
Output Current	I_{OUT}	500	mA/ch
Clamp Diode Forward Current	I_F	500	mA
5V VOLTAGE REGULATOR			
Input Voltage	V_{IN}	30	V
Output Current	I_{OUT}	200	mA

■ ELECTRICAL CHARACTERISTICS

Darlington Sink Drivers (T_A = 25°C unless otherwise specified)

PARAMETER	SYMBOL	TEST CONDITIONS		MIN	TYP	MAX	UNIT
Output Leakage Current	I_{LEAK}	V_{CE}=50V, T_A=25°C				50	μA
		V_{CE}=50V, T_A=85°C				100	
Collector-Emitter Saturation Voltage	$V_{CEO(SAT)}$	I_{OUT}=350mA, I_{IN}=500μA			1.3	1.6	V
		I_{OUT}=200mA, I_{IN}=350μA			1.1	1.3	
		I_{OUT}=100mA, I_{IN}=250μA			0.9	1.1	
DC Current Transfer Ratio	h_{FE}	V_{CE}=2V, I_{OUT}=350mA		1000			
Input Current (Output On)	$I_{IN\ (ON)}$	V_{IN}=2.4V, I_{OUT}=350mA			0.4	0.7	mA
Input Current (Output Off)	$I_{IN\ (OFF)}$	I_{OUT}=500μA, T_A=85°C		50	65		μA
Input Voltage (Output On)	$V_{IN(ON)}$	V_{CE}=2 V	I_{OUT}=350mA			2.6	V
			I_{OUT}=200mA			2.0	
Clamp Diode Reverse Current	I_R	V_R=50V, T_A=25°C				50	μA
		V_R=50V, T_A=85°C				100	
Clamp Diode Forward Voltage	V_F	I_F=350mA				2.0	V
Input Capacitance	C_{IN}				15		pF
Turn-On Delay	t_{ON}	V_{OUT}=50V, R_L=125Ω, C_L=15pF			0.1		μs
Turn-Off Delay	t_{OFF}	V_{OUT}=50V, R_L=125Ω, C_L=15pF			0.2		

■ ELECTRICAL CHARACTERISTICS(Cont.)

5V VOLTAGE REGULATOR

(V_{IN}=10V, I_{OUT}=40mA, 0°C<T_J<125°C, C1=0.33μF, Co=0.1μF, unless otherwise specified) (Note 1)

PARAMETER	SYMBOL	TEST CONDITIONS		MIN	TYP	MAX	UNIT
Output Voltage	V_{OUT}	T_J= 25°C		4.80	5.0	5.20	V
		7V≤V_{IN}≤20V, I_{OUT}=1mA-40mA		4.75		5.25	
		7V≤V_{IN}≤V_{MAX}, I_{OUT}=1mA-200mA(Note 2)		4.75		5.25	V
Load Regulation	ΔV_{OUT}	T_J=25°C, I_{OUT}=1mA-100mA			11	60	mV
		T_J=25°C, I_{OUT}=1mA-40mA			5.0	30	
Line regulation	ΔV_{OUT}	7V≤V_{IN}≤20V, T_J=25°C			8	150	mV
		8V≤V_{IN}≤20V, T_J=25°C			6	100	
Quiescent Current	I_Q	V_{IN}=10V, I_{OUT}=0mA, T_J=25°C			2.0	5.5	mA
Quiescent Current Change	ΔI_Q	8V≤V_{IN}≤20V				1.5	mA
		1mA≤V_{IN}≤40mA				0.1	
Max output current	$I_{OUT(MAX)}$	T_J=25°C	Vin=7V		400		mA
			Vin=30V		150		
Output Noise Voltage	e_N	10Hz ≤ f ≤ 100kHz			40		μV
Temperature coefficient of V_{OUT}	$\Delta V_O/\Delta T$	I_{OUT}=5mA			-0.65		mV/°C
Ripple Rejection	RR	8V≤V_{IN}≤20V, f=120Hz, T_J=25°C		41	80		dB
Dropout Voltage	V_D	T_J=25°C, I_{OUT}=100mA			1.7		V

Notes: 1. The Maximum steady state usable output current are dependent on input voltage, heat sinking, lead length of the package and copper pattern of PCB. The data above represent pulse test conditions with junction temperatures specified at the initiation of test.

2. Power dissipation<0.5W

■ TYPICAL APPLICATION CIRCUIT